PB# 86-13

Grove Homes
(Riley Rd.) (Sub.)

32-2-36.2

86-13
Grove Homes Subdivision
(Riley Road

BLOOMING GROVE OPERATING CO., INC. 1684
P.O. BOX 188
WASHINGTONVILLE, NY 10992

June 30 1986 50-193/219

THE ORDER OF Town of New Windsor $ 1,000.00
One thousand and 00/xx DOLLARS

BARCLAYS
BARCLAYS BANK OF NEW YORK, N.A.
353 WINDSOR HIGHWAY, NEW WINDSOR, NEW YORK 12550

FOR #8613 Vincent Brin.

BLOOMING GROVE OPERATING CO., INC. 1686
P.O. BOX 188
WASHINGTONVILLE, NY 10992

June 30 1986 50-193/219

PAY TO THE ORDER OF Town of New Windsor $ 50.00
Fifty and 00/xx DOLLARS

BARCLAYS

General Receipt

7265

TOWN OF NEW WINDSOR
555 Union Avenue
New Windsor, N. Y. 12550

Feb. 4 1986

Received of Zimmerman Eng. & Surveying, PC $ 75.00
Seventy-five and 00/xx DOLLARS

For Grove Subdivision Application Fees

DISTRIBUTION

FUND	CODE	AMOUNT
86-11-Anne	Marie Dr.	
86-12-Sycamore Dr.		
[illegible]	[illegible]	

By Pauline G Townsend
Town Clerk

General Receipt

7265

TOWN OF NEW WINDSOR
555 Union Avenue
New Windsor, N. Y. 12550

Feb. 4 1986

Received of Zimmerman Eng. & Surveying, PC $ 75.00
Seventy-five and 00/xx DOLLARS

For Grove Subdivision Application Fees

DISTRIBUTION

FUND	CODE	AMOUNT
86-11-Anne	Marie Dr.	
86-12-Sycamore Dr.		
86-13-Riley	Road	

By Pauline G Townsend
Town Clerk
Title

Williamson Law Book Co., Rochester, N. Y. 14609

General Receipt

7815

353 WINDSOR HIGHWAY, NEW WINDS...

FOR #8613 Vernal Tonn.

BLOOMING GROVE OPERATING CO., INC. 1686
P.O. BOX 188
WASHINGTONVILLE, NY 10992

50-193
219

June 30 1986

PAY TO THE ORDER OF Town of New Windsor $ 50 00
Fifty and 00/xx DOLLARS

BARCLAYS

General Receipt 7265

TOWN OF NEW WINDSOR
555 Union Avenue
New Windsor, N. Y. 12550

Feb. 4 1986

Received of Zimmerman Eng. & Surveying, PC $ 75.00
Seventy-five and 00/xx DOLLARS

For Grove Subdivision Application Fees

DISTRIBUTION

FUND	CODE	AMOUNT
86-11-Anne	Marie Dr.	
86-12-Sycamore	Dr.	
[illegible]	[illegible]	

By Pauline G Townsend
Town Clerk

General Receipt 7265

TOWN OF NEW WINDSOR
555 Union Avenue
New Windsor, N. Y. 12550

Feb. 4 1986

Received of Zimmerman Eng. & Surveying, PC $ 75.00
Seventy-five and 00/xx DOLLARS

For Grove Subdivision Application Fees

DISTRIBUTION

FUND	CODE	AMOUNT
86-11-Anne	Marie Dr.	
86-12-Sycamore	Dr.	
86-13-Riley	Road	

By Pauline G Townsend
Town Clerk
Title

Williamson Law Book Co., Rochester, N. Y. 14609

General Receipt 7815

TOWN OF NEW WINDSOR
555 Union Avenue
New Windsor, N. Y. 12550

July 7 1986

Received of Blooming Grove Operating Co. Inc $ 100.00
One Hundred and 00/100 DOLLARS

For Subdivision Fee - 86-13

DISTRIBUTION

FUND	CODE	AMOUNT
Check #	1685	100.00

By Pauline G. Townsend
Town Clerk
Title

Williamson Law Book Co., Rochester, N. Y. 14609

86-13

(This is a two-sided form)

PLANNING BOARD
TOWN OF NEW WINDSOR
555 UNION AVENUE
NEW WINDSOR, NY 12550

Date Received 2/1
Preapplication Approval
Preliminary Approval
Final Approval 7/2/86
Fees Paid $26

APPLICATION FOR SUBDIVISION APPROVAL

Date: January 30, 1986

1. Name of subdivision Subdivision for Grove Homes Inc. (Riley Road)

2. Name of applicant Grove Homes Inc. Phone 914-928-2361

Address P.O. Box 188, Washingtonville, N.Y. 10992
(Street No. & Name) (Post Office) (State) (Zip Code)

3. Owner of record John and Ann Torielli Phone

Address
(Street No. & Name) (Post Office) (State) (Zip Code)

4. Land Surveyor Gerald Zimmerman Phone 914-782-7976

Address Route 17M P.O. Box 313 Harriman, N.Y. 10926
(Street No. & Name) (Post Office) (State) (Zip Code)

5. Attorney Phone

Address
(Street No. & Name) (Post Office) (State) (Zip Code)

6. Subdivision location: On the east side of Riley Road
(Street)

1000 feet south of Little Britain Road
(direction)

7. Total Acreage 3.721± acres Zone R-4A Number of Lots 4

8. Tax map designation: Section 32 Lot(s) Block 2 - Lot 36.2

9. Has this property, or any portion of the property, previously been subdivided No.

If yes, when ; by whom .

10. Has the Zoning Board of Appeals granted any variance concerning this property No.

If yes, list case No. and Name

ist all contiguous holdings in the same ownership.

ection_____Block(s)_____Lot(s)_____

ttached hereto is an affidavit of ownership indicating the dates the respective holdings of nd were acquired, together with the liber and page of each conveyance into the present wner as recorded in the Orange County Clerk's Office. This affidavit shall indicate the gal owner of the property, the contract owner of the property and the date the contract of le was executed. IN THE EVENT OF CORPORATE OWNERSHIP: A list of all directors, fficers and stockholders of each corporation owning more than five percent (5%) of any ass of stock must be attached.

'ATE OF NEW YORK)
OUNTY OF ORANGE : SS.:

I, Gerald Zimmer (Agent for Applicant) hereby depose and say that l the above statements and the statements contained in the papers submitted herewith e true.

_____

Mailing Address_____

_____

/ORN to before me this
31st day of January, 1986
Elayne Wolfenhaut
NOTARY PUBLIC

ELAYNE WOLFENHAUT
NOTARY PUBLIC, State of N.Y.
No. 3770350
Resident of Orange County
Commission Expires 3/30/86

Subdivision for Grove Homes Inc.
(Riley Road)

APPENDIX B

SHORT ENVIRONMENTAL ASSESSMENT FORM

INSTRUCTIONS:

(a) In order to answer the questions in this short EAF is is assumed that the preparer will use currently available information concerning the project and the likely impacts of the action. It is not expected that additional studies, research or other investigations will be undertaken.

(b) If any question has been answered Yes the project may be significant and a completed Environmental Assessment Form is necessary.

(c) If all questions have been answered No it is likely that this project is not significant.

(d) Environmental Assessment

1. Will project result in a large physical change to the project site or physically alter more than 10 acres of land? . . . . . ___ Yes _x_ No
2. Will there be a major change to any unique or unusual land form found on the site? . . . . . ___ Yes _X_ No
3. Will project alter or have a large effect on an existing body of water? . . . . . ___ Yes _X_ No
4. Will project have a potentially large impact on groundwater quality? . . . . . ___ Yes _x_ No
5. Will project significantly effect drainage flow on adjacent sites? . . . . . ___ Yes _X_ No
6. Will project affect any threatened or endangered plant or animal species? . . . . . ___ Yes _X_ No
7. Will project result in a major adverse effect on air quality? . . . . . ___ Yes _X_ No
8. Will project have a major effect on visual character of the community or scenic views or vistas known to be important to the community? . . . ___ Yes _X_ No
9. Will project adversely impact any site or structure of historic, pre-historic, or paleontological importance or any site designated as a critical environmental area by a local agency? . . . ___ Yes _X_ No
10. Will project have a major effect on existing or future recreational opportunities? . . . ___ Yes _X_ No
11. Will project result in major traffic problems or cause a major effect to existing transportation systems? . . . . . ___ Yes _X_ No
12. Will project regularly cause objectionable odors, noise, glare, vibration, or electrical disturbance as a result of the project's operation? . ___ Yes _X_ No
13. Will project have any impact on public health or safety? . . . . . ___ Yes _X_ No
14. Will project affect the existing community by directly causing a growth in permanent population of more than 5 percent over a one-year period or have a major negative effect on the character of the community or neighborhood? . . ___ Yes _x_ No
15. Is there public controversy concerning the project? ___ Yes _X_ No

PREPARER'S SIGNATURE: Gerald Zimmerman TITLE: PROJECT ENGINEER

REPRESENTING: ZIMMERMAN ENG. DATE: 1-30-86

9/1/78

INTER-OFFICE MEMORANDUM

TO: PLANNING BOARD

FROM: TOWN ENGINEER CUOMO

SUBJECT: GROVE HOMES
RILEY ROAD

DATE: MAY 27, 1986

I have reviewed the above subject project with the Highway Superintendent and we have the following recommendations:

1. Require total length of 24" CMP to be 150 feet.
2. Drainage Easement to be increased to 20 feet.
3. Require well defined swale going into the 24" CMP.
4. Houses to have sewer pumps as approved by town specifications.

Very truly yours,

Paul V. Cuomo
Engineer

PVC/nh

PLANNING BOARD

PLANNING BOARD ENGINEER REVIEW FORM:

The maps and plans for the ~~Site Approval~~ GROVE HOMES
Subdivision ~~#~~ _____ as submitted by
ZIMMERMAN ENG for ~~the building or~~ subdivision
of GROVE HOMES has been reviewed
by me and is approved ✓ disapproved _____

If disapproved, please list reason.

PAUL V. CUOMO, P.E.

July 2, 1986
Date

N DEED

NEW YORK STATE THRUWAY

S 17°53'00"W 29.20'

N06°19'00"W 250.00'

152.10'

S07° 35'00"W 222.30'

345.80' S02°53'40"W 98.49'

106.50'

17.00'

LOT NO. 3
A= 1.1812 AC.

LOT NO. 4
A= 1.0364 AC.

LOT NO. 2
A= 32,691.91± S.F.

LOT NO. 1
A= 32,828.28± S.F.

PROPOSED HOUSE

PROP. WELL

PROP. DRIVE

1¼" PVC SEWER

N07°58'35"E 361.01'

N05°44'00"W 147.00'

300.00'

150.00'

N.Y.S. THRUWAY R.O.W. VARIES

N.Y.S. THRUWAY MONUMENT

N.Y.S. THRUWAY R.O.W. 200'

N.Y.S. THRUWAY R.O.W. 150'

N.Y.S. THRUWAY R.O.W. 100'

40' WIDE DRAINAGE EASE.

40' SWALE

EXISTING HOUSE

ADD 120' OF 24" CMP

1¼" PVC SEWER

N85°54'30"E 183.69'

S85°47'00"W 199.61'

N62°10'40"E 106.40'

N11°17'10"E 77.00'

60.00'

RILEY ROAD

TOP = 360
INV = 353.7

TOP = 360
INV = 353.5

SAN SEWER

18" CMP

RIVET 2.43' N.P.

0.32-B.2-L.36.1
N/F PASSERINO
L. 2392 P. 18

0.32-B.2-L.35.1
N/F TORIELLI
L. 1886 P. 622

0.32-B.2-L.35.2
N/F ROGERS
L. 1855 P. 528

FR LOT NO. 1
MAP NO. 7149

STONE WALL

FENCE

WIRE

MON

IRON

VICINITY MAP SCALE: 1" = 800'

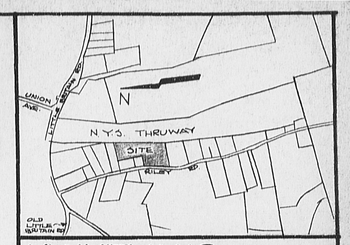

ZONING DATA

DISTRICT: R-3
MIN. LOT AREA = 32,670 S.F.
MIN. LOT WIDTH = 100'
MIN. FRONT YD. = 35'
MIN. SIDE YD. = 15'/30
MIN. REAR YD. = 40'
REQUIRED STREET FRONTAGE = 60'

TAX MAP NO.

SECTION: 32
BLOCK: 2
LOT: 36.2

DEED

LIBER: 2232
PAGE: 862

TOTAL TRACT AREA

3.721± ACRES

RECORD OWNER / SUBDIVIDER

JOHN & ANN TORIELLI / (CONTRACT PURCHASER) GROVE HOMES INC.

NOTES:

1. LOTS TO BE SERVED WITH MUNICIPAL SEWER & INDIVIDUAL WELLS
2. ALL LOTS SHALL BE SERVED BY INDIVIDUAL GRINDER PUMPS MODEL NO. GP-210, AS MANUFACTURED BY ENVIRONMENT ONE CORP. OR AN APPROVED EQUAL
3. THERE SHALL BE NO FURTHER SUBDIVISION OF THESE FOUR LOTS.

Subdivision APPROVAL GRANTED
BY TOWN OF NEW WINDSOR PLANNING BOARD
ON 7-2-86
BY Henry Scheible

HENRY F. SCHEIBLE
SECRETARY

86-13

BASIC ENVIRONMENT ONE GRINDER PUMP MODEL NO. GP-210

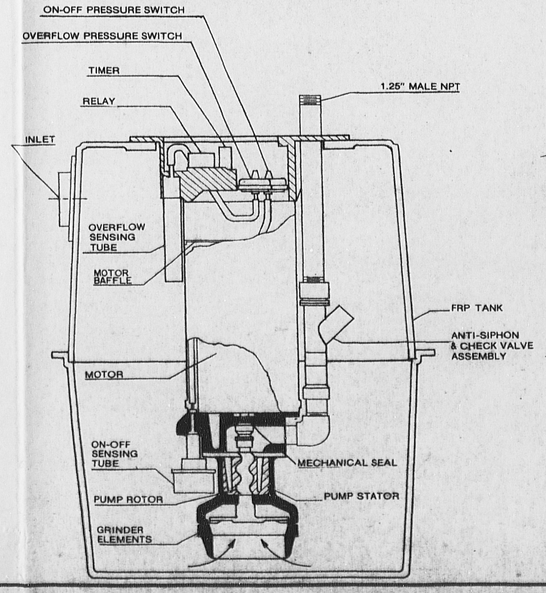

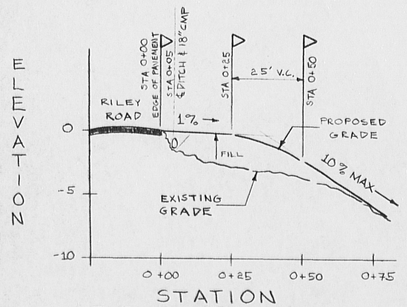

STATION
TYPICAL DRIVEWAY PROFILE

HORIZONTAL SCALE: 1" = 25'
VERTICAL SCALE: 1" = 5'

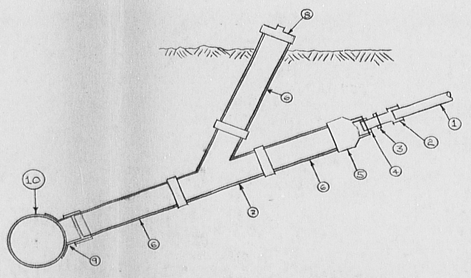

TYPICAL SEWER MAIN CONECTION WITH CLEANOUT
N.T.S.

1) 1½" PVC SEWER FROM HOUSE
2) 1½" SLIP × MALE ADAPTER
3) 1½ × 1½" FEMALE ADAPTER × MALE SLIP
4) 1½" × 3" FEMALE SLIP × MALE SLIP
5) 3" × 4" SLIP × SLIP
6) 4" PVC SEWER
7) 4×4×4 45° WYE
8) 4" CLEAN OUT ADAPTER W/ THREADED PLUG
9) 8×4 SADDLE TEE
10) EXISTING 8" PVC SEWER MAIN

Gerald Zimmerman

GERALD ZIMMERMAN PLS. LIC. NO. 49410
P.E. LIC. NO. 47391

LICENSED PROFESSIONAL ENGINEER GERALD ZIMMERMAN 047391 REGISTERED TO PRACTICE IN THE STATE OF NEW YORK

REV: 7-1-86
REV: 6-26-86
REV. 6-16-86
REV. 6-2-86
REV 5-23-86

SUBDIVISION FOR GROVE HOMES INC. (RILEY ROAD)

SCALE: 1" = 30'	JOB NO 85-260	DRAWN BY: J.F
DATE: 1-28-85		REV: 4-2-86

TOWN OF NEW WINDSOR
ORANGE COUNTY, NEW YORK
ZIMMERMAN ENGINEERING & SURVEYING P.C.
RT. 17M, HARRIMAN, N.Y.