WATERMAIN EXTENSION TO SERVE COVINGTON ESTATES

TOWN OF NEW WINDSOR
ORANGE COUNTY, NEW YORK

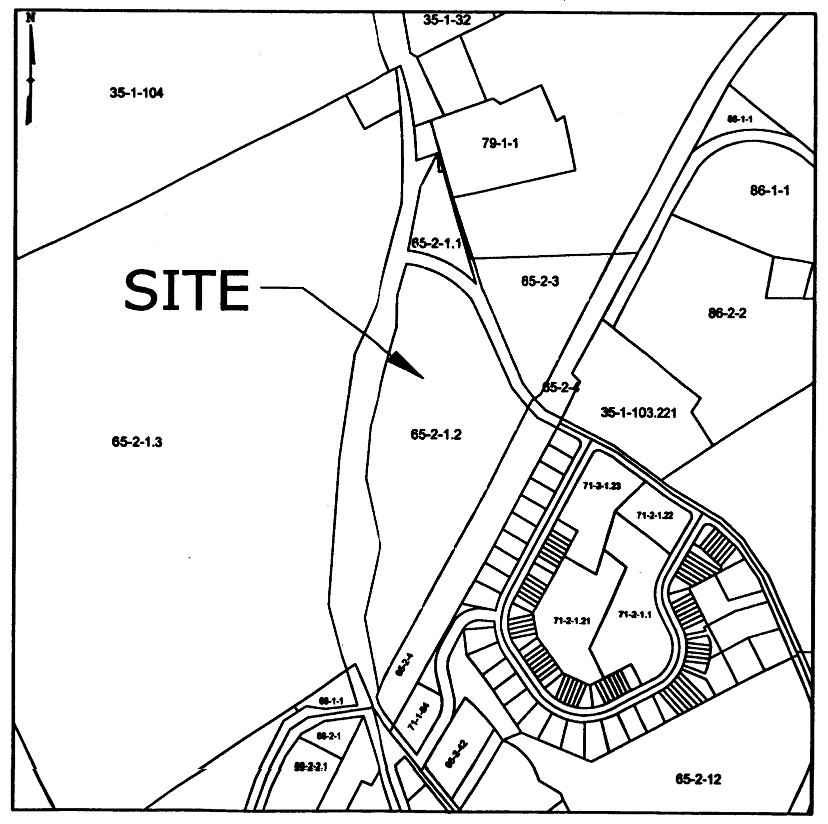

TAX MAP

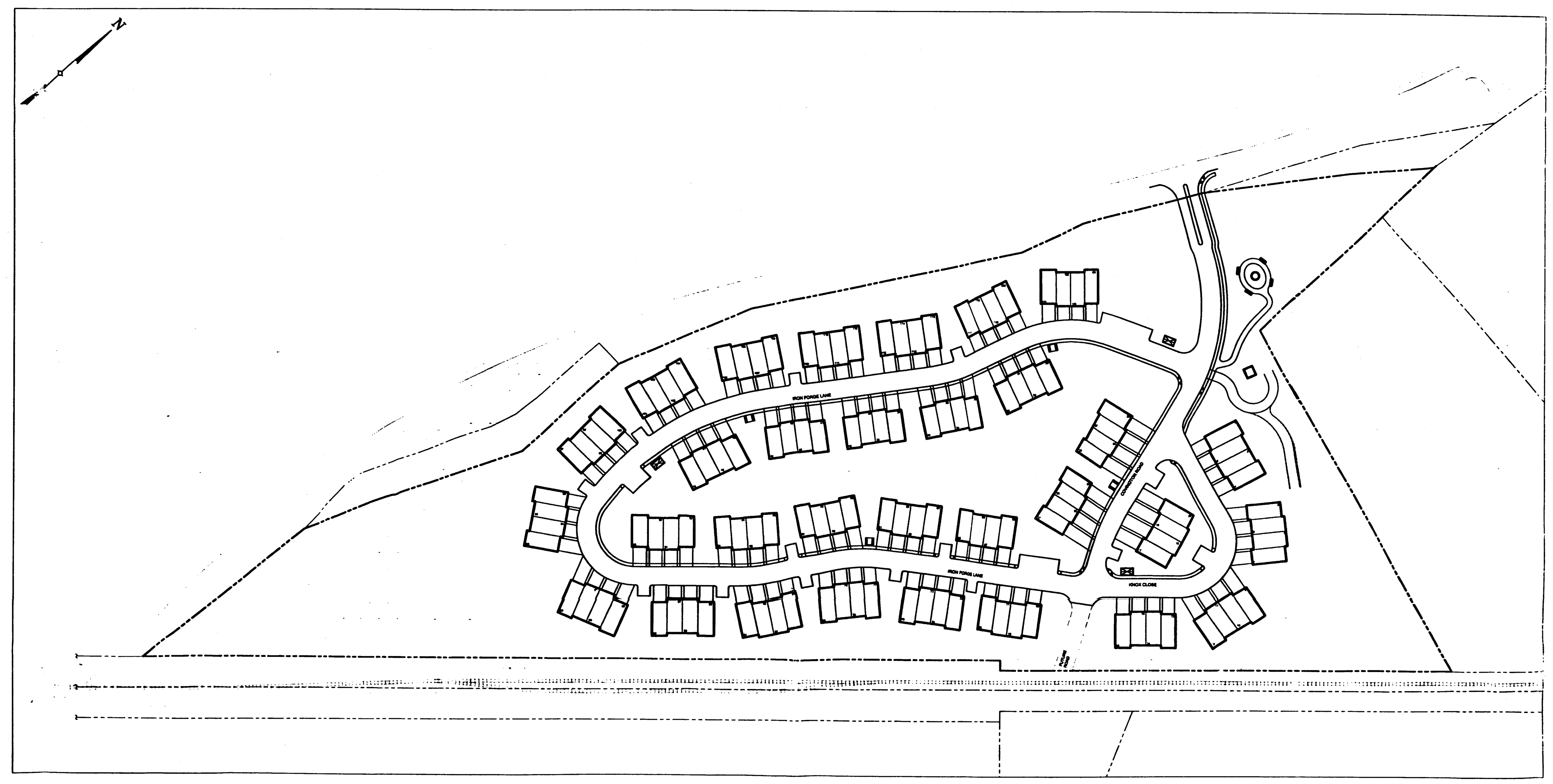

OVERALL PLAN

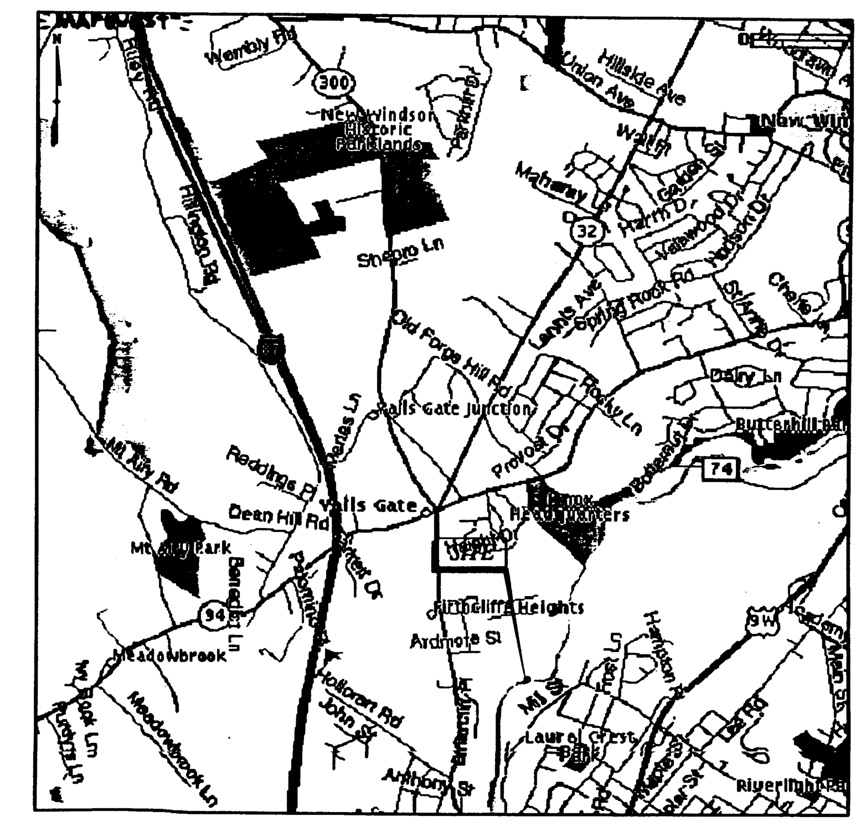

LOCATION MAP

LIST OF DRAWINGS

SHEET #	DRAWING #	TITLE
1		COVERSHEET
2	C-3	UTILITY PLAN
3	C-6	PROFILES
4	C-9	DETAILS

BULK REQUIREMENTS

TOWN OF NEW WINDSOR - ZONING DISTRICT R-5

MINIMUM BUILDING REQUIREMENTS	REQUIRED	PROPOSED
LOT AREA	5 AC OR 7,000 SF/UNIT	21.66 AC - 7609 SF/UNIT
LOT WIDTH	20 FEET	>20 FEET
LOT FRONTAGE	15 FEET	>15 FEET
FRONT YARD	30 FEET	30 FEET
REAR YARD	100 FEET	100 FEET
SIDE YARD (ONE/BOTH)	0/35 FEET	35 FEET
LIVABLE FLOOR AREA	1000 SF/UNIT	>1000 SF
FLOOR AREA RATIO	N/A	N/A
MAXIMUM ALLOWABLE		
DEVELOPMENT COVERAGE	50%	<50%
MAXIMUM BUILDING HEIGHT	35 FT	<35 FT

GENERAL NOTES

1. APPLICANT: LAND MASTER HARP, LLC
   C/O DAVID WEINBERG
   940 SOUTH AVENUE
   WESTFIELD, NJ 07091
2. TAX LOTS: 65-2-1.1
   65-2-1.2
   65-2-3
3. OWNER: WENDELL, ELWYN & STELLA HARP
   C/O WENDELL HARP
   83 CHESTNUT STREET, PO BOX 400
   NEW PALTZ, NY 12561
4. THE TWO EXISTING TAX LOTS IDENTIFIED 65-2-1.1 & 65-2-3 WILL BE COMBINED INTO ONE TAX LOT PRIOR TO SITEPLAN APPROVAL. THE REMAINING TAX LOT 65-2-1.2 SHALL NOT BE SOLD WITHOUT THE COMBINED LOT.
5. BOUNDARY AND TOPOGRAPHICAL INFORMATION PROVIDED FROM AND ACTUAL FIELD SURVEY PERFORMED BY TECTONIC ENGINEERING & SURVEYING CONSULTANTS, PC ON JULY 16, 2001.
6. ORANGE COUNTY DEPARTMENT OF HEALTH APPROVAL GRANTED FOR WATERMAIN EXTENSION ON JUNE 12, 2003.

DENSITY CALCULATION

TOWN OF NEW WINDSOR - ZONING DISTRICT R-5

MINIMUM BUILDING REQUIREMENTS

LOT AREA:
65-2-1.1 61,122 SF = 1.40 AC
65-2-1.2 175,185 SF = 4.02 AC
65-2-3.0 707,221 SF = 16.24 AC
943,528 SF 21.66 AC

LOT AREA DEDUCTIONS:
HIGHWAY ROW NORTH 13,782 SF
HIGHWAY ROW SOUTH 28,117 SF
WETLANDS 28,585 SF
SEWER EASEMENT 6,716 SF
PEDESTRIAN EASEMENT 1,174 SF
78,374 SF

UNITS PERMITTED:
(943,528 SF - 78,374 SF) / 7,000 SF = 124 UNITS

UNITS PROPOSED:
30 BUILIDING X 4 UNITS EACH = 120 UNITS
2 BUILIDING X 2 UNITS EACH = 4 UNITS

TOTAL = 124 UNITS

PARKING CALCULATION

TOTAL UNIT COUNT: 124 UNITS

TOTAL PARKING REQUIRED:

2 SPACES PER UNIT = 124 UNITS x 2 SPACES = 248 SPACES REQUIRED

PROVIDED:

2 SPACES PER UNIT - (1 GARAGE, 1 DRIVEWAY) = 248 SPACES
GUEST SPACES - 50 SPACES

SUMMARY:

248 PARKING SPACES REQUIRED
298 PARKING SPACES PROVIDED

RECEIVED
TOWN OF NEW WINDSOR
FEB - 8 2005
ENGINEER & PLANNING

01-41

ORANGE COUNTY DEPARTMENT OF HEALTH APPROVAL BOX

ORANGE COUNTY DEPARTMENT OF HEALTH
DIVISION OF ENVIRONMENTAL HEALTH

These plans for Specs for WM Ext to serve Covington Estates, T. New Windsor are hereby approved pursuant to Part 5 of the New York State Sanitary Code, subject to the provisions of the certificate of approval issued this date.

ASSISTANT COMMISSIONER

11-23-04 [signature] PE

EP ENGINEERING PROPERTIES, PC
110 ORANGE AVE.
WALDEN, NY 12586
Ph: (845) 778-4313
Fx: (845) 778-4869

COVINGTON ESTATES
NOVEMBER 21, 2002
REVISED OCTOBER 28, 2004
ORANGE COUNTY DEPARTMENT OF HEALTH SHEET 1 OF 4
THIS SHEET SHALL BE CONSIDERED INVALID
UNLESS ACCOMPIED BY ALL OCDOH SHEETS

© COPYRIGHT 2004 ENGINEERING PROPERTIES, PC

LEGEND

- EDGE OF CURBED ROADWAY
- EDGE OF DRIVEWAY
- ROAD CENTERLINE
- FUTURE ROAD CENTERLINE
- FUTURE ROAD EDGE OF PAVEMENT
- SIDEWALK
- BUILDING
- SETBACK LINE
- MAJOR CONTOUR
- MINOR CONTOUR
- STORM DRAIN
- SEWER GRAVITY MAIN
- SEWER FORCEMAIN
- WATER MAIN
- SILT FENCE
- RETAINING WALL
- LIMIT OF TREE CLEARING
- FENCE
- GRASSED SWALE
- SEWER MANHOLE
- SANITARY SEWER SERVICE CLEANOUT
- STORM CATCHBASIN
- FLARED ENDSECTION
- EXISTING PROPERTY LINE
- EXISTING EASEMENT LINE
- EXISTING RIGHT OF WAY LINE
- EXISTING CENTERLINE OF RIGHT OF WAY
- EXISTING CONTOUR LINE
- EXISTING INDEX CONTOUR LINE
- EXISTING GUIDE RAIL
- EXISTING CURBLINE
- EXISTING STONE WALL
- EXISTING EDGE OF WATER
- EXISTING RAIL ROAD TRACK
- EXISTING SWALE
- EXISTING OVERHEAD WIRES
- EXISTING TREE LINE
- WATER VALVE
- (2) - 1" CURB STOPS
- HYDRANT
- HAY BALE CATCH BASIN PROTECTION
- FES OUTLET RIP-RAP PROTECTION
- EXISTING STRUCTURE
- EXISTING ROCK OUTCROP
- EXISTING NYSDOT MONUMENT FOUND
- EXISTING MAGNAIL
- EXISTING UTILITY POLE
- EXISTING GUY ANCHOR
- EXISTING FIELD INLET
- EXISTING MANHOLE (UNKNOWN)
- EXISTING BENCHMARK
- EXISTING WATER VALVE
- EXISTING HYDRANT
- EXISTING SIGN
- EXISTING LIGHT POST

SANITARY SEWER STRUCTURE SCHEDULE

STRUCTURE	ROAD	STATION	RIM	INV. IN	INV. OUT	PIPE OUT	TO STRUCTURE
SMH1			296.75	291.10	291.25	8" SDR 35, 30 LF @ 0.5%	PUMP STATION
SMH2	COV	3+62	295.42	283.50	291.06	8" SDR 35, 48 LF @ 0.5%	SMH1
				291.68			
SMH3	COV	4+76	303.48	299.10	299.00	8" SDR 35, 105 LF @ 5.23%	SMH2
				300.25			
SMH4	COV	6+49	307.90		305.00	8" SDR 35, 170 LF @ 2.8%	SMH3
SMH5	KNOX	22+77	304.05	299.85	298.75	8" SDR 35, 130 LF @ 0.5%	SMH3
SMH6	KNOX	21+47	304.97	300.50	300.40	8" SDR 35, 107 LF @ 0.50%	SMH5
SMH7	IRON	19+40	308.45	303.70	303.60	8" SDR 35, 192 LF @ 1.81%	SMH6
SMH8	IRON	16+41	318.35		311.50	8" SDR 35, 269 LF @ 2.85%	SMH7
SMH9	IRON	15+44	318.37		313.50	8" SDR 35, 211 LF @ 4.10%	SMH10
SMH10	IRON	13+27	307.83	304.84	304.74	8" SDR 35, 148 LF @ 5.5%	SMH11
SMH11	IRON	11+73	300.49	296.73	296.63	8" SDR 35, 95 LF @ 2.25%	SMH12
SMH12	IRON	10+58	298.35	294.00	293.88	8" SDR 35, 94 LF @ 9.25%	SMH21
				293.88			
SMH13	IRON	9+47	299.40	295.85	295.55	8" SDR 35, 105 LF @ 1.5%	SMH12
SMH14	IRON	9+26	304.00	301.21	301.11	8" SDR 35, 116 LF @ 4.75%	SMH13
SMH15	IRON	7+15	308.26	308.83	308.73	8" SDR 35, 165 LF @ 3.35%	SMH14
SMH16	IRON	4+39	315.01	310.05 (FM)	310.00	8" SDR 35, 271 LF @ 1.17%	SMH15
SMH17	IRON	3+35	310.79		308.00	8" SDR 35, 92 LF @ 3.5%	SMH16
SMH18	IRON	2+67	307.39	304.61	304.51	8" SDR 35, 72 LF @ 5.25%	SMH19
SMH19	IRON	1+87	303.40	300.74	300.64	8" SDR 35, 177 LF @ 5.05%	SMH2
SMH20	IRON	1+59	302.47	297.00	297.00	4" SDR 26, 201 LF @ -5.0%	SMH18
SMH21	-	-	289.05	285.21	285.11	8" SDR 35, 61 LF @ 29.0%	SMH22
SMH22	-	-	271.60	267.91	267.81	8" SDR 35, 95 LF @ 8.0%	SMH23
SMH23	-	-	265.33	262.11	VIF	-	-

ORANGE COUNTY DEPARTMENT OF HEALTH APPROVAL BOX

ORANGE COUNTY DEPARTMENT OF HEALTH
DIVISION OF ENVIRONMENTAL HEALTH

By direction of the State Commissioner of Health these plans are hereby approved pursuant to the Public Health Law. See first sheet for date and signature.

TOWN OF NEW WINDSOR PLANNING BOARD APPROVAL BOX

GRAPHIC SCALE

40 0 20 40 80

1 inch = 40 ft.

REV #	DATE	REVISION
1	01/09/03	REVISED PER ODOH COMMENTS DATED 12/05/02
2	02/13/03	REVISED PER ODOH COMMENTS DATED 02/04/03
3	04/04/03	GENERAL REVISIONS (ODOH & NYSDOT COMMENTS)
4	04/11/03	ISSUED TO ODOH FOR APPROVAL
5	05/05/03	REVISED PER ODOH COMMENTS DATED 05/05/03
6	07/02/04	ISSUED FOR TOWN OF NEW WINDSOR FINAL APPROVAL
7	10/28/04	REVISED SCALE & TITLEBLOCK

DRAWING STATUS

RELEASE DATE: 10/28/04

- CONCEPT
- PROGRESS PRINT
- PLANNING BOARD SKETCH
- PLANNING BOARD PRELIMINARY
- PLANNING BOARD FINAL
- ACOE
- ODOH
- NYSDHC
- NYSDOT
- DCDPW
- PCH, SSD
- FOR CONSTRUCTION

"FIELD CHANGES MAY BE MADE TO THIS PLAN AS DEEMED NECESSARY BY THE ENGINEER OF RECORD DURING CONSTRUCTION"

COPIES OF THIS DOCUMENT WITH CUT AN ACTUAL OR FACSIMILE OF THE SIGNATURE AND AN ORIGINAL STAMP IS RED OR BLUE INK SHALL BE CONSIDERED INVALID COPIES.

UNAUTHORIZED ALTERATION OR ADDITIONS TO THIS DOCUMENT BEARING THE SEAL OF A LICENSED PROFESSIONAL ENGINEER IS A VIOLATION OF SECTION 7209 SUBSECTION 2 OF THE NEW YORK STATE EDUCATION LAW.

NEW WINDSOR PLANNING BOARD SHEET 1 OF 11

GRANGE COUNTY DEPARTMENT OF HEALTH SHEET NO.

THIS SHEET SHALL BE CONSIDERED INVALID UNLESS ACCOMPANIED BY ALL ODOH SHEETS

ENGINEERING PROPERTIES, PC
110 ORANGE AVE.
WALDEN, NY 12586
Ph: (845) 778-4315
Fx: (845) 778-4099

UTILITY PLAN

COVINGTON ESTATES
N.Y.S. ROUTE 300
TOWN OF NEW WINDSOR
ORANGE COUNTY, NEW YORK

DATE	01/21/03	SHEET	101.01
SCALE	1" = 40'	DRAWING NO.	C-3
DRAWN	JMC	CHECKED	JMC
W.O. NO.	2002-2	REVISION	7 - 10/28/04

© COPYRIGHT 2004 ENGINEERING PROPERTIES, PC

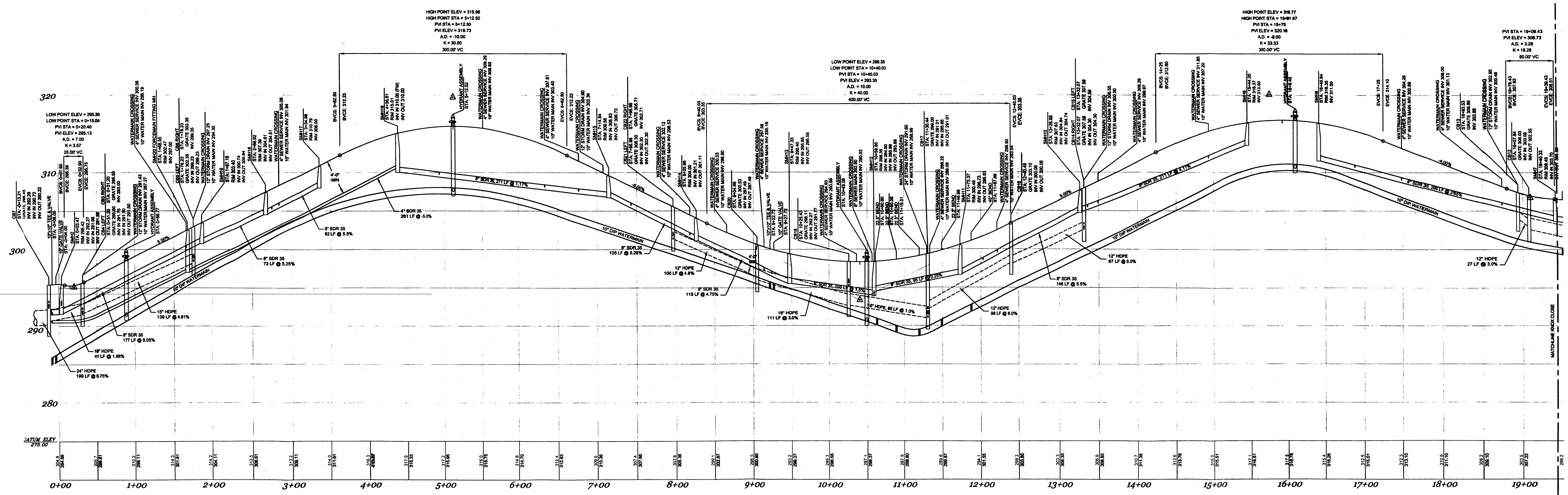

IRON FORGE LANE
STA: 0+00-19+42.83

SCALE: 1"= 50' H
1"= 5' V

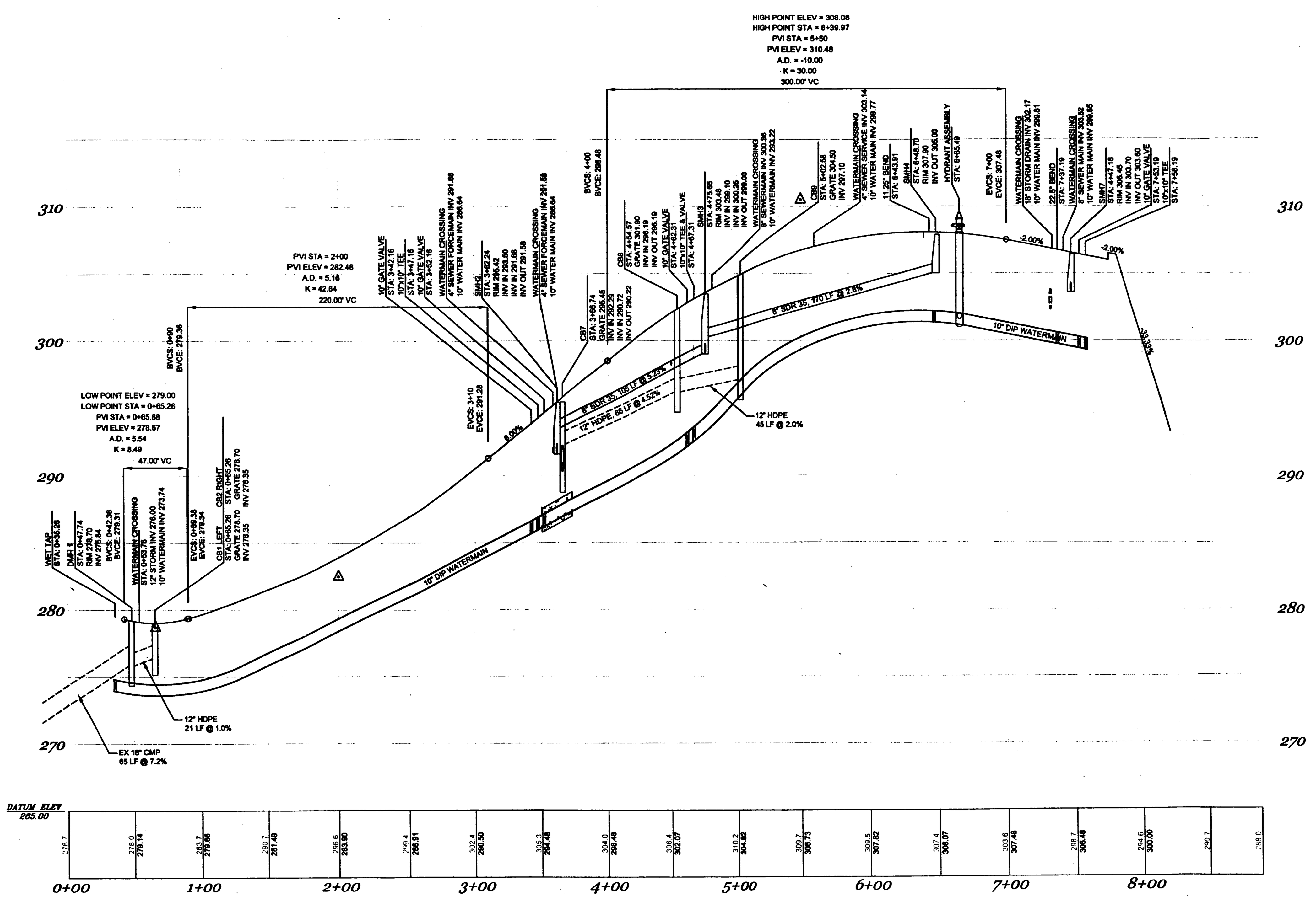

COVINGTON ROAD
STA: 0+00 8+88.65

SCALE: 1"= 50' H
1"= 5' V

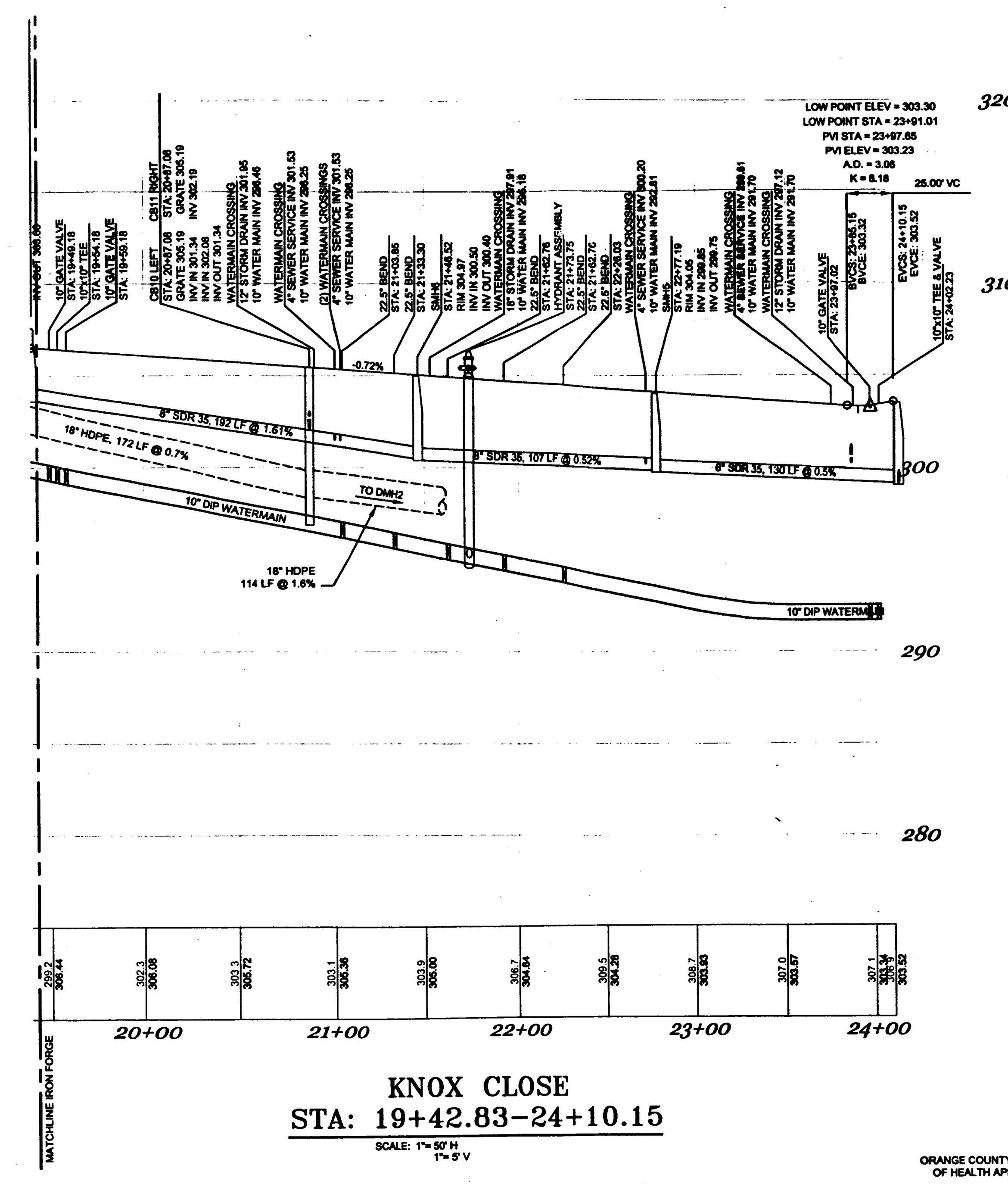

KNOX CLOSE
STA: 19+42.83-24+10.15

SCALE: 1"= 50' H
1"= 5' V

ORANGE COUNTY DEPARTMENT OF HEALTH APPROVAL BOX

ORANGE COUNTY DEPARTMENT OF HEALTH
DIVISION OF ENVIRONMENTAL HEALTH

By direction of the State Commissioner of Health these plans are hereby approved pursuant to the Public Health Law. See first sheet for date and signature.

NEW WINDSOR PLANNING BOARD APPROVAL BOX

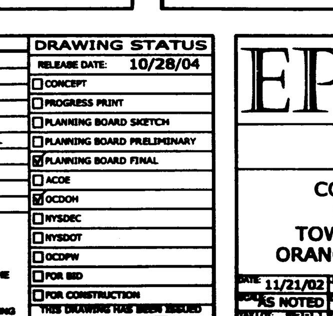

GRAPHIC SCALE

1 inch = 50 ft.

REV #	DATE	REVISION
1	01/08/03	REVISED PER OCDOH COMMENTS DATED 12/30/02
2	02/12/03	REVISED PER OCDOH COMMENTS DATED 02/04/03
3	04/01/03	GENERAL REVISIONS (OCDOH & NYSDOT COMMENTS)
4	04/11/03	ISSUED TO OCDOH FOR APPROVAL
5	06/02/03	REVISED PER OCDOH COMMENTS DATED 05/29/03
6	07/02/04	ISSUED FOR TOWN OF NEW WINDSOR FINAL APPROVAL
7	10/28/04	REVISED SCALE & TITLEBLOCK

COPIES OF THIS DOCUMENT WITH OUT AN ACTUAL OR FACSIMILE OF THE SIGNATURE AND AN ORIGINAL STAMP IN RED OR BLUE INK SHALL BE CONSIDERED INVALID COPIES.

UNAUTHORIZED ALTERATION OR ADDITIONS TO THIS DOCUMENT BEARING THE SEAL OF A LICENSED PROFESSIONAL ENGINEER IS A VIOLATION OF SECTION 7209 SUBSECTION 2 OF THE NEW YORK STATE EDUCATION LAW.

DRAWING STATUS

RELEASE DATE: 10/28/04

- ☐ CONCEPT
- ☐ PROGRESS PRINT
- ☐ PLANNING BOARD SKETCH
- ☐ PLANNING BOARD PRELIMINARY
- ☑ PLANNING BOARD FINAL
- ☐ ACOE
- ☑ OCDOH
- ☐ NYSDEC
- ☐ NYSDOT
- ☐ OCDPW
- ☐ FOR BID
- ☐ FOR CONSTRUCTION

THIS DRAWING HAS BEEN ISSUED FOR APPROVAL OR ACTION AS NOTED ABOVE AND SHALL NOT BE USED FOR ANY OTHER PURPOSE.

EP ENGINEERING PROPERTIES, PC
110 ORANGE AVE. WALDEN, NY 12586
Ph: (845) 778-4313
Fx: (845) 778-4869

PROFILES

COVINGTON ESTATES
N.Y.S. ROUTE 300
TOWN OF NEW WINDSOR
ORANGE COUNTY, NEW YORK

DATE: 11/21/02 | JOB #: 101.01 | SCALE: AS NOTED | DRAWN BY: JRS | CHECKED BY: JRS | REVISION: 7 - 10/28/04

C-6

NEW WINDSOR PLANNING BOARD SHEET 7OF 11

ORANGE COUNTY DEPARTMENT OF HEALTH SHEET 3OF 4

THIS SHEET SHALL BE CONSIDERED INVALID UNLESS ACCOMPANIED BY ALL OCDOH SHEETS

© COPYRIGHT 2004 ENGINEERING PROPERTIES, PC

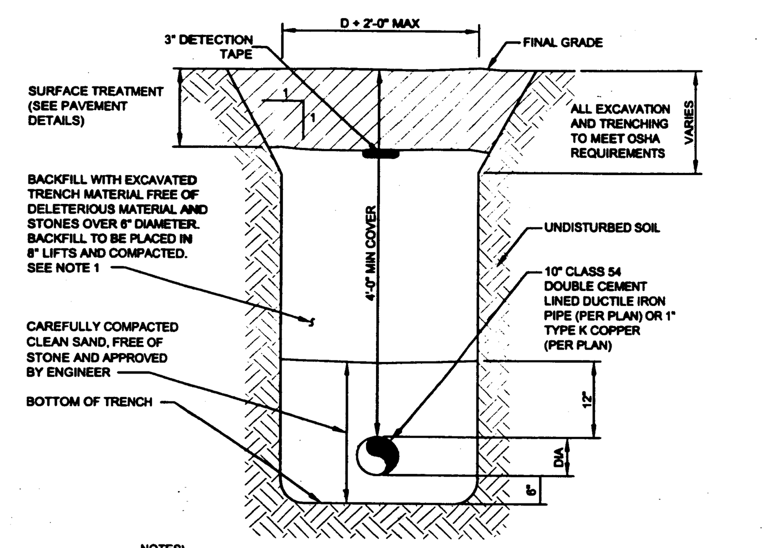

NOTES:

1. ALL FILL BELOW IMPERVIOUS AREAS SHALL BE WITH SELECT GRANULAR SUBGRADE NYSDOT ITEM# 203.20 FOR THE FULL DEPTH OF THE EXCAVATION. BACKFILL SHALL BE PLACED IN 8" MAXIMUM LIFTS AND COMPACTED TO 95% OF MAXIMUM DRY DENSITY AS DETERMINED BY MODIFIED PROCTOR TEST.
2. EXCAVATIONS IN EXISTING PAVED ROADWAYS SHALL BE COORDINATED WITH THE MUNICIPAL ENGINEER.
3. ALL EXCAVATION AND TRENCHING TO MEET OSHA REQUIREMENTS.

WATER PIPE TRENCH
SCALE: NTS

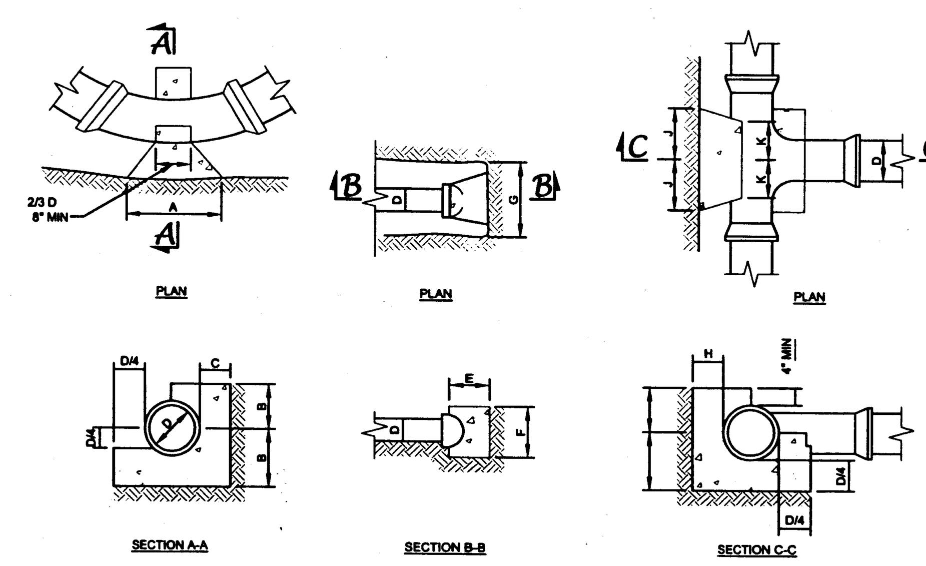

HORIZONTAL BEND

BEND		4"	6"	8"	10"
11 1/4" BEND	A	6"	8"	10"	12"
	B	7"	8"	9"	10"
	C	7"	7"	8"	8"
22 1/2" BEND	A	9"	12"	18"	21"
	B	7"	8"	9"	10"
	C	8"	9"	10"	11"
45° BEND	A	15"	15"	25"	30"
	B	7"	8"	9"	10"
	C	8"	9"	10"	11"
90° BEND	A	24"	30"	36"	42"
	B	8"	9"	12"	15"
	C	22"	21"	20"	19"

CAP

D	6"	8"
E	6"	8"
F	12"	16"
G	17"	23"

TEE

D	4"	6"	8"	10"
H	8"	9"	10"	12"
I	8"	10"	12"	15"
J	7"	9"	12"	14"
K	6"	8"	8"	8"

NOTES:

1. ALL CONCRETE TO BE 3000 PSI.
2. ALL THRUST BLOCKS TO BE CARRIED TO UNDISTURBED EARTH.
3. THRUST BLOCK DIMENSIONS SHOWN ARE MINIMUM.
4. ALL FITTINGS ARE TO INCLUDE THRUST BLOCKS AND RETAINER GLANDS.

THRUST BLOCK
SCALE: NTS

NOT FOR OCHD REVIEW OR APPROVAL

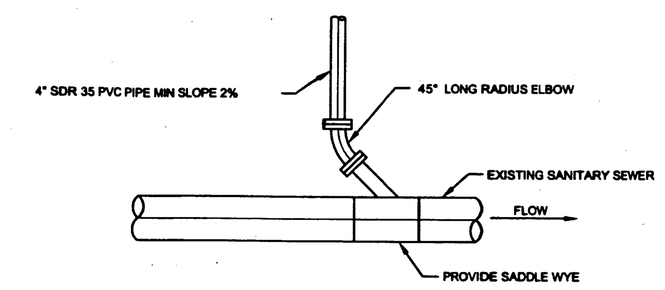

SEWER SERVICE CONNECTION
SCALE: NTS

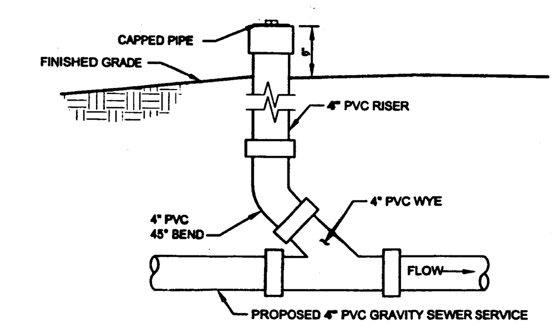

TYPICAL CLEANOUT
SCALE: NONE

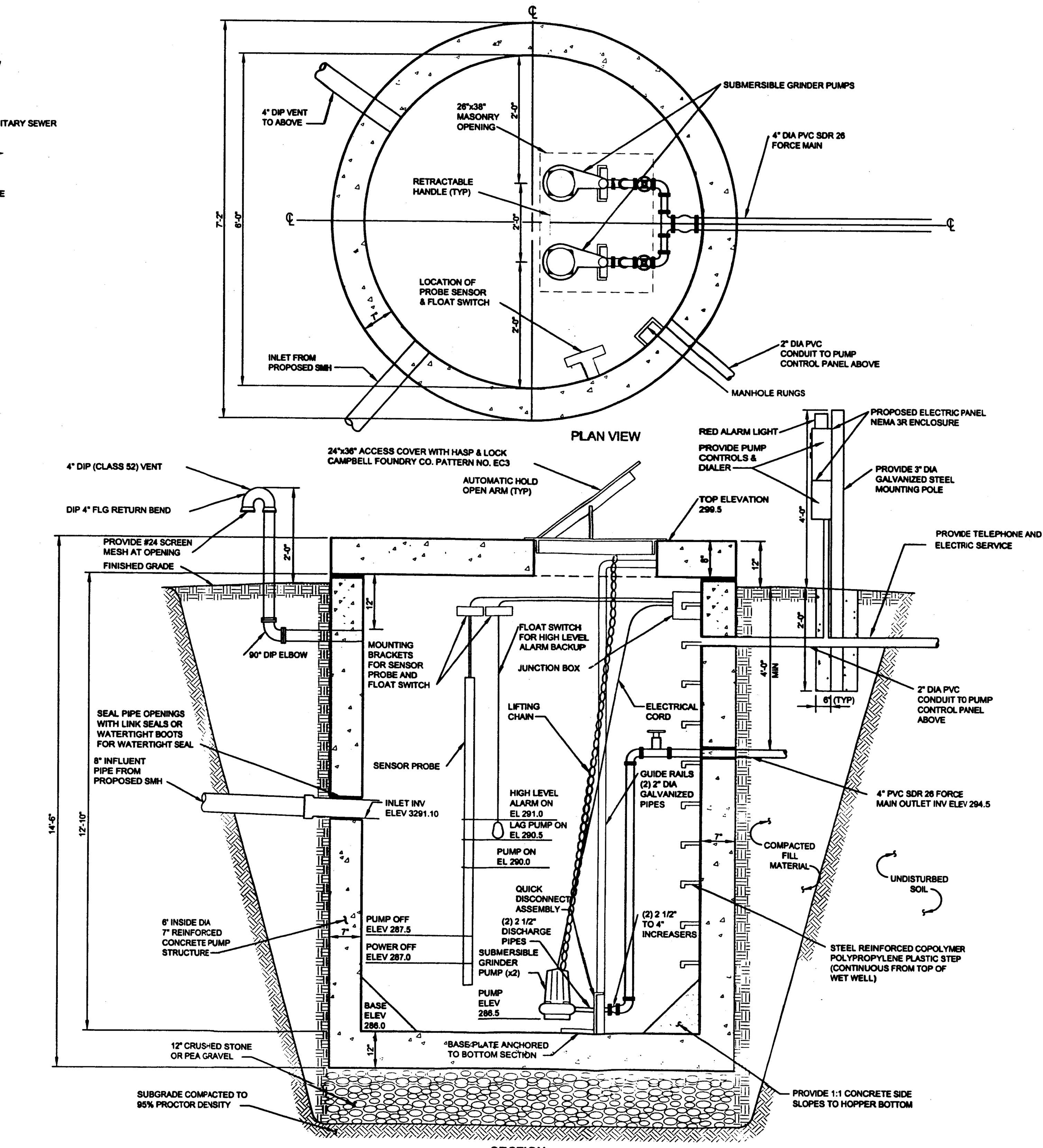

NOTE:

1. REFER TO SITE PLAN FOR ACTUAL ORIENTATION OF INLET, VENT, CONTROL PANEL CONDUIT AND DISCHARGE PIPING.
2. THICKNESS SHOWN ARE MINIMUM. PUMP STATION CONCRETE REINFORCEMENT TO BE DESIGNED BY THE MANUFACTURER.

PUMP STATION
SCALE: NTS

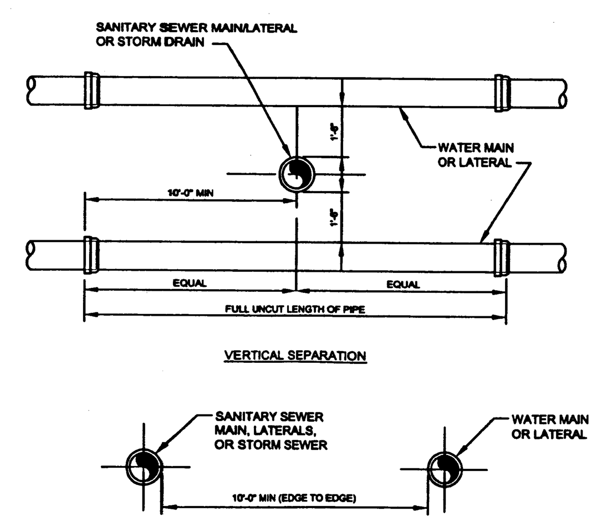

NOTE:

NO DEVIATION IN THE SEPARATION REQUIREMENTS WILL BE PERMITTED WITHOUT APPROVAL OF THE ORANGE COUNTY DEPARTMENT OF HEALTH.

WATER/SEWER SEPARATION REQUIREMENTS
SCALE: NTS

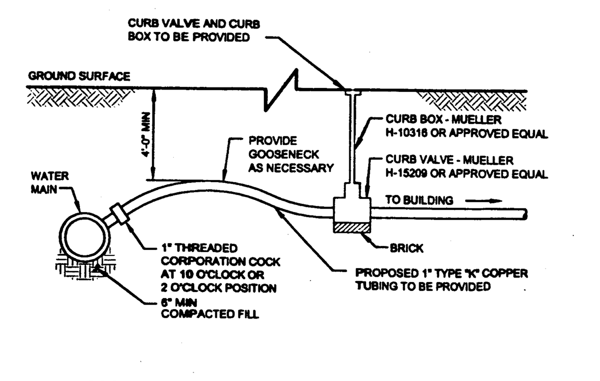

WATER SERVICE CONNECTION
SCALE: NTS

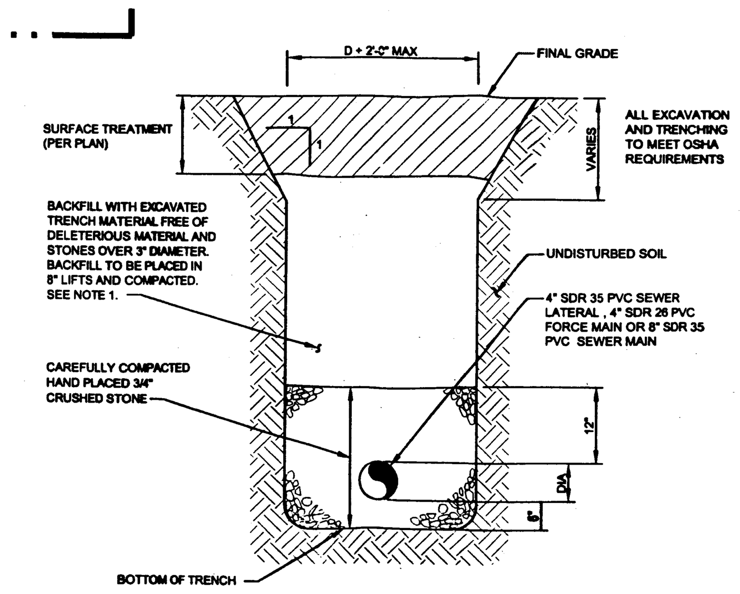

NOTES:

1. ALL FILL BELOW IMPERVIOUS AREAS SHALL BE WITH SELECT GRANULAR SUBGRADE NYSDOT ITEM# 203.20 FOR THE FULL DEPTH OF THE EXCAVATION. BACKFILL SHALL BE PLACED IN 8" MAXIMUM LIFTS AND COMPACTED TO 95% OF MAXIMUM DRY DENSITY AS DETERMINED BY MODIFIED PROCTOR TEST.
2. EXCAVATIONS IN EXISTING PAVED ROADWAYS SHALL BE COORDINATED WITH THE MUNICIPAL ENGINEER.
3. ALL EXCAVATION AND TRENCHING TO MEET OSHA REQUIREMENTS.

SEWER PIPE TRENCH
SCALE: NTS

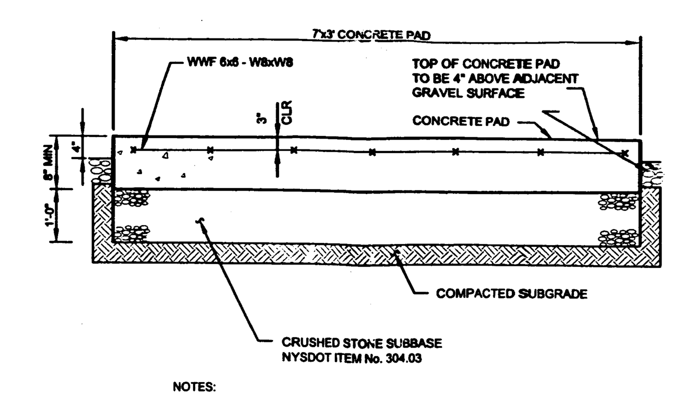

NOTES:

1. ALL CONCRETE FOR GENERATOR PAD SHALL BE 4000 PSI AT 28 DAYS WITH BROOM FINISH.

GENERATOR PAD
SCALE: 3/4"=1'-0"

PUMP STATION SPECIFICATIONS

PUMPS SHALL BE CAPABLE OF DELIVERING A MINIMUM OF 80 GALLONS PER MINUTE AGAINST A TOTAL DYNAMIC HEAD OF 30 FEET. PUMPS SHALL BE SUBMERSIBLE GRINDER TYPE AS MANUFACTURED BY MEYERS PUMPS MODEL WG30, 3450 RPM, W/4" IMPELLER, SINGLE PHASE OR APPROVED EQUAL. PUMPS SHALL COME WITH AN 18 MONTH WARRANTY FROM DATE OF MANUFACTURE AND A 12 MONTH WARRANTY FROM DATE OF INSTALLATION.

PUMP CHAMBER SHALL BE A DUPLEX SYSTEM WITH PUMPS ALTERNATING IN SEQUENCE. UPON THE LIQUID LEVEL REACHING THE PUMP ON ELEVATION, PUMP NO. 1 WILL ENGAGE AND PUMP THE EFFLUENT OUT OF THE PUMP STATION UNTIL THE PUMP OFF ELEVATION IS REACHED AT WHICH TIME THE PUMP WILL DISENGAGE. THE SAME SITUATION SHALL OCCUR WHEN THE PUMP ON ELEVATION IS REACHED AGAIN EXCEPT THAT PUMP NO. 2 WILL ENGAGE AND PUMP NO. 1 WILL REMAIN IDLE. IF THE HIGH LEVEL ALARM IS REACHED, BOTH PUMPS SHALL ENGAGE AND THE HIGH LEVEL ALARM WILL ACTIVATE. THE PUMP CHAMBER MANHOLE SHALL BE 6.0 FOOT IN DIAMETER AND HAVE AN 12-INCH THICK BASE, 8-INCH TOP AND 7-INCH MINIMUM THICK CONCRETE WALLS. CONCRETE SHALL BE AT LEAST 4000 PSI AT 28 DAYS AND BE REINFORCED IN ACCORDANCE WITH ASTM A615 - GRADE 60 AND ASTM A185 -GRADE 65. THE CHAMBER SHALL BE AS MANUFACTURED BY FORT MILLER OR APPROVED EQUAL. THE TOP ACCESS COVER SECTION SHALL BE AS MANUFACTURED BY CAMPBELL FOUNDRY CO. PATTERN NO. EC3 OR APPROVED EQUAL AND HAVE A 24" X 36" HINGED OPENING WITH A LOCKING HASP.

THE CONTROL PANEL AND VISUAL AND AUDIO ALARMS SHALL BE MOUNTED ADJACENT TO THE PUMP STATION. THE CONTROL PANEL SHALL BE EQUIPPED WITH AN OPTIONAL GFI RECEPTACLE AS MANUFACTURED BY MULTITRODE OR APPROVED EQUAL. THE LIQUID LEVELS SHALL BE CONTROLLED BY A LIQUID LEVEL SENSING PROBE AS MANUFACTURED BY MULTITRODE AND A MYERS MODEL FLCA MERCURY TUBE (FLOAT BALL) FOR ALARM CONDITION ONLY OR APPROVED EQUALS AND BE CONNECTED TO THE PUMP CONTROL PANEL WITHOUT A SPLICE. THE PROBE SHALL MOUNT ON A BRACKET BY MULTITRODE MODEL MTAK-1 OR APPROVED EQUAL AND BE MOUNTED ON THE INSIDE PUMP CHAMBER WALL. THE PROBE AD FLOAT SWITCH SHALL BE LOCATED AWAY FROM INLET PIPE TO AVOID TURBULENCE.

THE PUMP STATION SHALL BE EQUIPPED WITH A GALVANIZED CHAIN AND GUIDE RAIL ASSEMBLY TO PERMIT THE PUMPS TO BE LIFTED AND REMOVED WITHOUT ENTERING THE WET WELL. THE GUIDE RAIL, BASE AND UPPER BRACKET AND QUICK DISCONNECT ELBOW SHALL BE AS MANUFACTURED BY MEYERS PUMPS, OR APPROVED EQUAL.

ALL INTERIOR PIPING AND FITTINGS WITHIN THE PUMP STATION SHALL BE FLANGED DUCTILE IRON PIPE. A CHECK VALVE AND GATE VALVE ASSEMBLY SHALL BE PROVIDED ON EACH DISCHARGE LINE WITHIN THE WET WELL. IN ADDITION THE TWO DISCHARGE LINES SHALL BE JOINED INTO A SINGLE FORCE MAIN WITHIN THIS STRUCTURE. ALL CHECK VALVES AND GATE VALVES SHALL BE FLANGED AS MANUFACTURED BY CLOW, PART NO. F-5335 AND F-5070 OR APPROVED EQUAL.

GENERATOR SPECIFICATIONS

BACK-UP POWER SHALL BE PROVIDED BY STAND-BY-GENERATOR WITH ENCLOSURE. THE GENERATOR SHALL BE EQUIPPED WITH AN AUTOMATIC TRANSFER SWITCH AS MANUFACTURED BY KOHLER, MODEL R340 ATS-K-224433-0100 OR APPROVED EQUAL. THE GENERATOR SHALL BE AS MANUFACTURED BY KOHLER POWER SYSTEMS, MODEL #20RZ, OR APPROVED EQUAL.

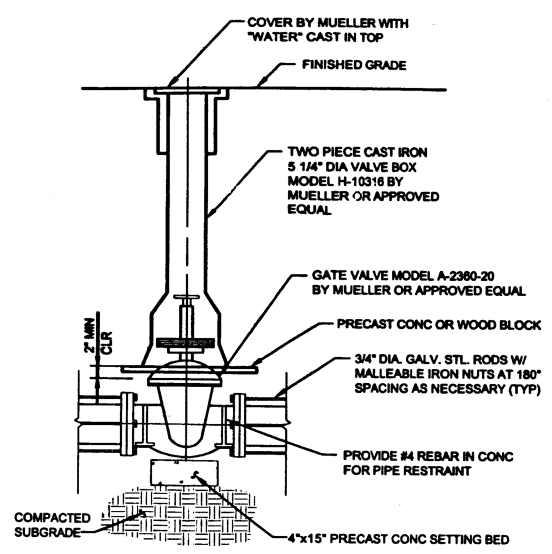

VALVE AND VALVE BOX
SCALE: NTS

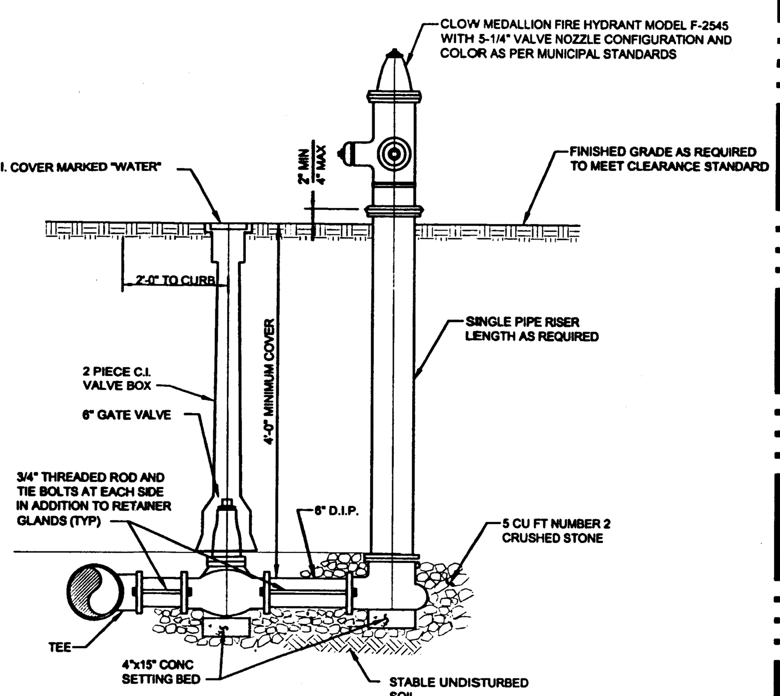

NOTE:

1. A HYDRANT WITH THE PROPER RISER LENGTH (DEPTH OF BURY) SHALL BE INSTALLED AS REQUIRED TO MEET THE 2" MIN TO 4" MAX CLEARANCE BETWEEN THE CENTER OF THE BREAK AWAY FLANGES AND FINISHED GRADE SURFACE.
2. IN AREAS THAT EXPERIENCE SEASONABLY HIGH GROUND WATER LEVELS, THE HYDRANT BARRELL WEEPHOLE MUST REMAIN PLUGGED. IF THE HYDRANT BARRELL WEEPHOLE IS PLUGGED THE HYDRANT MUST BE MARKED ACCORDINGLY TO INDICATE THAT THE BARRELL MUST BE PUMPED DRY AFTER USE TO PREVENT DAMAGE DURING FREEZING TEMPERATURES.
3. FIRE HYDRANT TO HAVE ONE SHOP COAT AND ONE FIELD COAT OF XXX PAINT.

HYDRANT DETAIL
SCALE: NTS

NOT FOR OCHD REVIEW OR APPROVAL

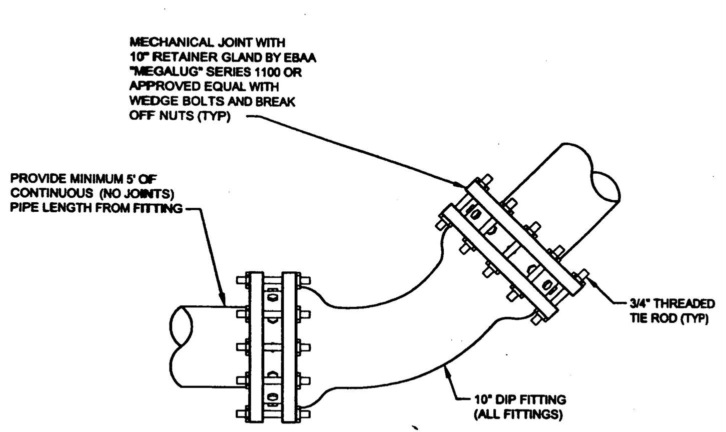

NOTE:

TEE	RESTRAIN ALL JOINTS WITHIN 29 FEET OF FITTING
90°	RESTRAIN ALL JOINTS WITHIN 29 FEET OF FITTING
45°	RESTRAIN ALL JOINTS WITHIN 12 FEET OF FITTING
22.5°	RESTRAIN ALL JOINTS WITHIN 6 FEET OF FITTING
11.25°	RESTRAIN ALL JOINTS WITHIN 3 FEET OF FITTING

PIPE RESTRAINT DETAIL
SCALE: NTS

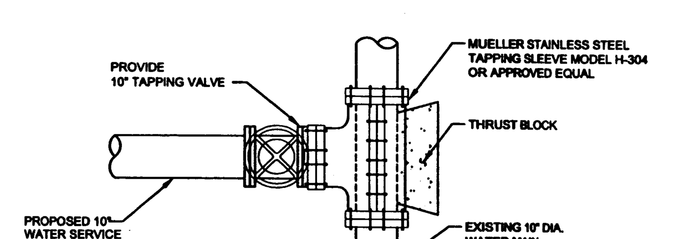

NOTES:

1. WET TAP TO BE PERFORMED BY CONTRACTOR WITH ENGINEER ON SITE.
2. CONTRACTOR TO CONTACT TOWN OF NEW WINDSOR WATER DEPARTMENT FOR INSTALLATION REQUIREMENTS.

WET TAP
SCALE: NTS

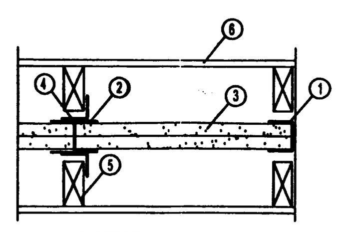

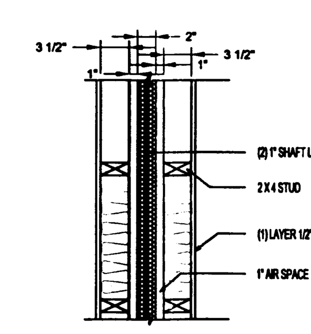

DESIGN NO. DIWA 120-03

ASSEMBLY RATING - 2 HOURS

1. FLOOR, UPPER, CORNER AND INTERSECTION RUNNERS - 'U' SHAPE RUNNER, 2 1/8" DEEP ROLLFORMED FROM MINIMUM 0.018" THICK GALVANIZED STEEL.
2. STEEL STUDS - 'H' SHAPED STUDS, 1 1/2" WIDE BY 2" DEEP, ROLL-FORMED FROM MINIMUM 0.018" THICK GALVANIZED STEEL.
3. GYPSUM SHAFTLINER - 1" THICK SHAFTLINER, NOMINAL 24" WIDTH.
4. ALUMINUM CLIPS - 2" LONG X 2" LEGS X 0.063" THICK ALUMINUM ANGLE SPACED AT 108" O.C. MAXIMUM, VERTICALLY, TO WOOD FRMG. W/ 1 1/4" TYPE 'W' DRYWALL SCREWS.
5. 2 X 4 NOMINAL WALL FRMG.
6. GYPSUM BOARD - 1/2" THICK GYPSUM WALL BOARD.

2 HOUR FIRE RATED DIVISION WALL WALL
SCALE: NTS

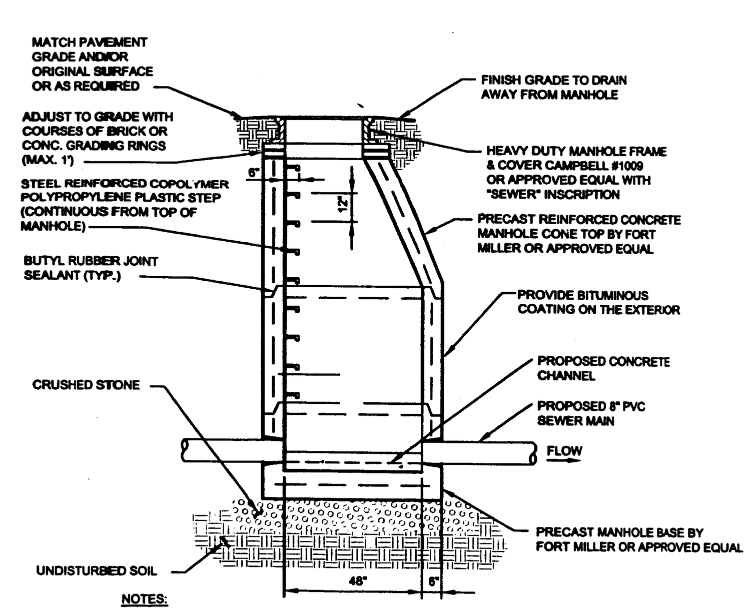

NOTES:

1. CONCRETE TO HAVE A MINIMUM COMPRESSIVE STRENGTH OF 4000 PSI @ 28 DAYS
2. REINFORCEMENT TO BE IN CONFORMANCE WITH ASTM A615 GRADE 60 AND AND ASTM A185 GRADE 65
3. CONTRACTOR TO ORDER MANHOLE SECTIONS FROM MANUFACTURER TO MATCH REQUIRED ELEVATIONS AND INVERTS PER PLAN.

SEWER MANHOLE
SCALE: NTS

WATER SYSTEM NOTES

1. CONTRACTOR SHALL VERIFY THE LOCATION AND ELEVATION OF EXISTING WATER AND SEWER UTILITIES PRIOR TO THE COMMENCEMENT OF CONSTRUCTION.
2. CONTRACTOR TO CALL UNDERGROUND MARK-OUT AT LEAST 2 DAYS PRIOR TO COMMENCEMENT OF CONSTRUCTION AT 1-800-245-2828 FOR COMPLETE UTILITIES MARKOUT.
3. CONTRACTOR TO CONTACT TOWN OF NEW WINDSOR WATER DEPARTMENT AT (845) 561-2250 AT LEAST 2 DAYS PRIOR TO CONSTRUCTION.
4. ALL IMPROVEMENTS SHALL BE INSPECTED BY A PROFESSIONAL ENGINEER LICENSED IN THE STATE OF NEW YORK AND CERTIFICATION SHALL BE PROVIDED TO THE TOWN OF NEW WINDSOR THAT THE SUBJECT IMPROVEMENTS HAVE BEEN CONSTRUCTED IN ACCORDANCE WITH THE APPROVED PLANS.
5. WATER MAIN TO BE 10" CLASS 54 BITUMINOUS COATED DOUBLE CEMENT LINED DUCTILE IRON PIPE.
6. CONTRACTOR TO NOTIFY ENGINEER OF ANY DEVIATION FROM HORIZONTAL OR VERTICAL ALIGNMENTS WITH REGARDS TO EXISTING UTILITIES.
7. A CERTIFIED AS BUILT MAP OF THE WATER SYSTEM IMPROVEMENTS SHALL BE PROVIDED TO THE TOWN OF NEW WINDSOR WATER DEPARTMENT BY A LICENSED DESIGN PROFESSIONAL.
8. THE NEEDED FIRE FLOW IN ACCORDANCE WITH INSURANCE OFFICES REQUIREMENTS HAS BEEN CALCULATED TO BE 1250GPM. BASED UPON FIRE FLOW TEST DATA PROVIDED BY THE TOWN OF NEW WINDSOR FIRE INSPECTORM, THE AVAILABLE FIRE FLOW ON-SITE IS CALCULATED TO BE 1045 GPM. SEE ENGINEERS REPORT FOR DETAILED CALCULATIONS.

NOT FOR OCHD REVIEW OR APPROVAL

SEWER SYSTEM NOTES

1. THE SANITARY SEWER MAIN INSTALLATION SHALL BE INSPECTED BY A LICENSED PROFESSIONAL ENGINEER IN THE STATE OF NEW YORK AND SHALL BE CERTIFIED TO THE TOWN OF NEW WINDSOR BUILDING INSPECTOR THAT THE IMPROVEMENTS HAVE BEEN COMPLETED IN ACCORDANCE WITH THE DESIGN PLANS AND CODE REQUIREMENTS.
2. ALL GRAVITY SEWER PIPE SHALL BE SDR 35 PVC.
3. IF GROUNDWATER IS ENCOUNTERED DURING TRENCH EXCAVATION, THE CONTRACTOR SHALL DEWATER THE TRENCH PRIOR TO INSTALLATION. ALL DEWATERING OPERATIONS SHALL BE DONE AT THE CONTRACTOR'S EXPENSE.
4. CONTRACTOR TO VERIFY INVERT ELEVATIONS OF EXISTING SEWER MAIN PRIOR TO COMMENCEMENT OF CONSTRUCTION.
5. CONTRACTOR SHALL CALL THE TOWN SEWER DEPARTMENT AT LEAST TWO DAYS PRIOR TO THE COMMENCEMENT OF CONSTRUCTION OF SEWERS.
6. CONTRACTOR SHALL CALL UNDERGROUND MARKOUT AT 1-800-245-2828 AT LEAST TWO DAYS PRIOR TO THE COMMENCEMENT OF CONSTRUCTION OF SEWERS FOR COMPLETE UTILITY MARKOUT.
7. ALL SANITARY SEWER FORCE MAIN PIPE SHALL BE 4" PVC SDR 26, UNLESS OTHERWISE NOTED.
8. CONTRACTOR TO VERIFY INVERT ELEVATIONS OF EXISTING SEWER MAIN PRIOR TO COMMENCEMENT OF CONSTRUCTION.

ORANGE COUNTY DEPARTMENT OF HEALTH APPROVAL BOX

ORANGE COUNTY DEPARTMENT OF HEALTH
DIVISION OF ENVIRONMENTAL HEALTH
By direction of the State Commissioner of Health these plans are hereby approved pursuant to the ... Health Law. See first sheet for date and ...ature.

TOWN OF NEW WINDSOR PLANNING BOARD APPROVAL BOX

REV #	DATE	REVISION
1	01/08/03	REVISED PER OCDOH COMMENTS DATED 12/20/02
2	02/12/03	REVISED PER OCDOH COMMENTS DATED 02/04/03
3	04/01/03	GENERAL REVISIONS (OCDOH & NYSDOT COMMENTS)
4	04/11/03	ISSUED TO OCDOH FOR APPROVAL
5	08/02/03	REVISED PER OCDOH COMMENTS DATED 05/28/03
6	07/02/04	ISSUED FOR TOWN OF NEW WINDSOR FINAL APPROVAL
7	10/28/04	REVISED SCALE & TITLEBLOCK

COPIES OF THIS DOCUMENT WITH OUT AN ACTUAL OR FACSIMILE OF THE SIGNATURE AND AN ORIGINAL STAMP IN RED OR BLUE INK SHALL BE CONSIDERED INVALID COPIES.

UNAUTHORIZED ALTERATION OR ADDITIONS TO THIS DOCUMENT BEARING THE SEAL OF A LICENSED PROFESSIONAL ENGINEER IS A VIOLATION OF SECTION 7209 SUBSECTION 2 OF THE NEW YORK STATE EDUCATION LAW.

DRAWING STATUS
RELEASE DATE: 10/28/04
☐ CONCEPT
☐ PROGRESS PRINT
☐ PLANNING BOARD SKETCH
☐ PLANNING BOARD PRELIMINARY
☑ PLANNING BOARD FINAL
☐ ACOE
☑ OCDOH
☐ NYSDEC
☐ NYSDOT
☐ OCDPW
☐ FOR BID
☐ FOR CONSTRUCTION

THIS DRAWING HAS BEEN ISSUED FOR APPROVAL OR ACTION AS NOTED ABOVE AND SHALL NOT BE USED FOR ANY OTHER PURPOSE.

EP ENGINEERING PROPERTIES, PC
110 ORANGE AVE. WALDEN, NY 12586
Ph: (845) 778-4313
Fx: (845) 778-4869

DETAILS

COVINGTON ESTATES
N.Y.S. ROUTE 300
TOWN OF NEW WINDSOR
ORANGE COUNTY, NEW YORK

DATE: 11/21/02 | JOB #: 101.01 | C-9
SCALE: AS NOTED | DRAWN BY: JRS
TAX LOT: 65-1-1.1, 65-1-1.2, 65-2-1 | CHECKED BY: JRS | REVISION: 7 - 10/28/04

NEW WINDSOR PLANNING BOARD SHEET 10 OF 11
ORANGE COUNTY DEPARTMENT OF HEALTH SHEET 4 OF 4
THIS SHEET SHALL BE CONSIDERED INVALID UNLESS ACCOMPANIED BY ALL OCDOH SHEETS

© COPYRIGHT 2004 ENGINEERING PROPERTIES, PC

LEGEND

EDGE OF CURBED ROADWAY	EXISTING PROPERTY LINE		EXISTING STRUCTURE
EDGE OF DRIVEWAY	EXISTING EASEMENT LINE		EXISTING ROCK OUTCROP
ROAD CENTERLINE	EXISTING RIGHT OF WAY LINE		EXISTING NYSDOT MONUMENT FOUND
FUTURE ROAD CENTERLINE	EXISTING CENTERLINE OF RIGHT OF WAY		EXISTING MAGNAIL
FUTURE ROAD EDGE OF PAVEMENT	EXISTING CONTOUR LINE		EXISTING UTILITY POLE
SIDEWALK	EXISTING INDEX CONTOUR LINE		EXISTING GUY ANCHOR
BUILDING	EXISTING GUIDE RAIL		EXISTING FIELD INLET
SETBACK LINE	EXISTING CURBLINE		EXISTING MANHOLE (UNKNOWN)
MAJOR CONTOUR	EXISTING STONE WALL		EXISTING BENCHMARK
MINOR CONTOUR	EXISTING EDGE OF WATER		EXISTING WATER VALVE
STORM DRAIN	EXISTING RAIL ROAD TRACK		EXISTING HYDRANT
SEWER GRAVITY MAIN	EXISTING SWALE		EXISTING SIGN
SEWER FORCEMAIN	EXISTING OVERHEAD WIRES		EXISTING LIGHT POST
WATER MAIN	EXISTING TREE LINE		
SILT FENCE	WATER VALVE		
RETAINING WALL	(2) - 1" CURB STOPS		
LIMIT OF TREE CLEARING	HYDRANT		
FENCE	CATCH BASIN PROTECTION		
GRASSED SWALE	FES OUTLET RIP-RAP PROTECTION		
SEWER MANHOLE			
SANITARY SEWER SERVICE CLEANOUT			
STORM CATCHBASIN			
FLARED ENDSECTION			

SITE PLAN NOTES

1. THE COVINGTON ESTATES CONDOMINIUM ASSOCIATION WILL BE RESPONSIBLE FOR THE MAINTENANCE OF ALL STORMWATER DETENTION PONDS. THE PONDS WILL BE MAINTAINED AS REQUIRED TO PROVIDE FOR AN ENVIRONMENT FREE OF STAGNANT WATER AND INSECT LARVA.
2. THE BUILDING FOOTPRINTS FOR THE TOWNHOUSES SHOWN ON THE PLANS ARE FOR ILLUSTRATIVE PURPOSES ONLY. ALTHOUGH THE FOOTPRINT MAY CHANGE, THE BUILDINGS WILL BE CONSTRUCTED TO MEET ALL APPLICABLE ZONING ORDINANCE SETBACK REQUIREMENTS.

No.	DATE	DESCRIPTION
1	01/06/03	REVISED PER OCDOH COMMENTS DATED 12/30/02
2	02/13/03	REVISED PER OCDOH COMMENTS DATED 02/04/03
3	04/01/03	GENERAL REVISIONS (OCDOH & NYSDOT COMMENTS)
4	04/11/03	ISSUED TO OCDOH FOR APPROVAL
5	06/02/03	REVISED PER OCDOH COMMENTS DATED 05/29/03
6	07/02/04	ISSUED FOR TOWN OF NEW WINDSOR FINAL APP
7	10/28/04	REVISED SCALE & TITLEBLOCK
8	05/26/05	ZBA SUBMITTAL
9	07/26/05	REVISED TO INCLUDE ZBA VARIANCE
10	04/05/06	REVISED PER PB COMMENTS
11	08/23/06	REVISED PER BUILDERS COMMENTS
12	09/20/06	REVISED PER TOWN ENGINEERS COMMENTS
13	11/08/06	REVISED PER TOWN OCDOH COMMENTS
14	08/01/07	REVISED FOR BID
15	11/27/07	REVISED FOR WATERMAIN & NYSDOT
16	02/26/08	REVISED FOR BID

DRAWING STATUS	ISSUE DATE: 02/26/08		
THIS SHEET IS PART OF THE PLAN SET ISSUED FOR	SHEET NUMBER		
☐ CONCEPT APPROVAL	N/A	OF	N/A
☐ PLANNING BOARD APPROVAL	N/A	OF	N/A
☐ OCDOH REALTY SUBDIVISION APPROVAL	N/A	OF	N/A
☐ OCDOH WATERMAIN EXTENSION APPROVAL	N/A	OF	N/A
☐ NYSDEC APPROVAL	N/A	OF	N/A
☐ NYSDOT APPROVAL	N/A	OF	N/A
☐ OTHER	N/A	OF	N/A
☑ FOR BID	2	OF	11
☐ FOR CONSTRUCTION	N/A	OF	N/A

THIS PLAN SET HAS BEEN ISSUED SPECIFICALLY FOR THE APPROVAL OR ACTION NOTED ABOVE AND SHALL NOT BE USED FOR ANY OTHER PURPOSE. THIS SHEET SHALL BE CONSIDERED INVALID UNLESS ACCOMPANIED BY ALL SHEETS OF THE DENOTED PLAN SET(S).

COPIES OF THIS DOCUMENT WITHOUT AN ACTUAL OR FACSIMILE OF THE ENGINEER'S SIGNATURE AND AN ORIGINAL STAMP IN RED OR BLUE INK SHALL BE CONSIDERED INVALID.

UNAUTHORIZED ALTERATIONS OR ADDITIONS TO THIS DOCUMENT BEARING THE SEAL OF A LICENSED PROFESSIONAL ENGINEER IS A VIOLATION OF SECTION 7209 SUBSECTION 2 OF THE NEW YORK STATE EDUCATION LAW.

STATE OF NEW YORK — JAY SAMUELSON — LICENSED PROFESSIONAL ENGINEER

JAY SAMUELSON, P.E.
NEW YORK STATE LICENSE # 080223

40 0 20 40 80
1 inch = 40 ft.

ENGINEERING PROPERTIES, PC
110 ORANGE AVENUE
WALDEN, NY 12586
Ph: (845) 778-4313
Fx: (845) 778-4699

SITE PLAN

COVINGTON ESTATES
NYS ROUTE 300
TOWN OF NEW WINDSOR
ORANGE COUNTY, NEW YORK

JOB #:	101.1	DRAWN BY:	JRS	
DATE:	11/21/02	SCALE:	1"=40'	C-1
REVISION:	16 - 02/26/08	TAX LOT:	65-1-1.1, 65-1-1.2, 65-2-3	

©COPYRIGHT 2007 ENGINEERING PROPERTIES, PC

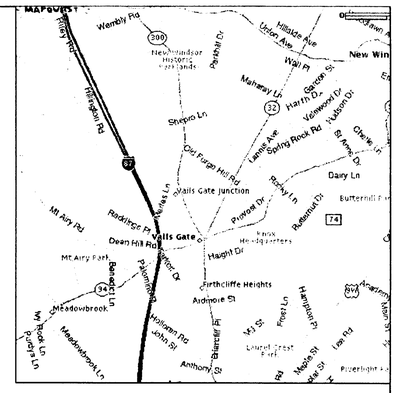

LOCATION MAP

SCALE: 1" = 2000'

GENERAL NOTES

1. APPLICANT: RRMGNW C/O DAVID WEINBERG
   940 SOUTH AVENUE
   WESTFIELD, NJ 07091
2. TAX LOTS: 65-2-1.1
   65-2-1.2
   65-2-3
3. OWNER: WENDELL, ELWYN & STELLA HARP
   C/O WENDELL HARP
   83 CHESTNUT STREET, PO BOX 400
   NEW PALTZ, NY 12561

BULK REQUIREMENTS

TOWN OF NEW WINDSOR – ZONING DISTRICT R-5

MINIMUM BUILDING REQUIREMENTS	REQUIRED	PROPOSED
LOT AREA	5 AC OR 7,000 SF/UNIT	20.92 AC
LOT WIDTH	20 FEET	>20 FEET
LOT FRONTAGE	15 FEET	>15 FEET
FRONT YARD	30 FEET	30 FEET
REAR YARD	100 FEET	100 FEET
SIDE YARD (ONE/BOTH)	0/35 FEET	35 FEET
LIVABLE FLOOR AREA	1000 SF/UNIT	>1000 SF
MAXIMUM ALLOWABLE		
DEVELOPMENT COVERAGE	50%	<50%
MAXIMUM BUILDING HEIGHT	35 FT	35 FT

DENSITY CALCULATION

TOWN OF NEW WINDSOR – ZONING DISTRICT R-5

MINIMUM BUILDING REQUIREMENTS

LOT AREA 20.92 AC = 911,275 SF

MAX. UNITS PERMITTED – 911,275 SF/7,000 SF = 130 UNITS

UNITS PROPOSED – 17 BUILDING X 6 UNITS EACH = 102 UNITS
7 BUILDING X 4 UNITS EACH = 28 UNITS
TOTAL = 130 UNITS

PARKING CALCULATION

TOTAL UNIT COUNT: 130 UNITS

TOTAL PARKING REQUIRED:

2 SPACES PER UNIT = 130 UNITS x 2 SPACES = 260 SPACES REQUIRED

PROVIDED:

2 SPACES PER UNIT – (1 GARAGE, 1 DRIVEWAY) = 260 SPACES
CLUBHOUSE PARKING AREA – 20 SPACES

SUMMARY:
260 PARKING SPACES REQUIRED
280 PARKING SPACES PROVIDED

TECTONIC ENGINEERING CONSULTANTS P.C.
P.O. Box 37, 70 Pleasant Hill Road
Mountainville, NY 10953
(845) 534-5959

UNAUTHORIZED ALTERATION OR ADDITIONS TO A DOCUMENT BEARING THE SEAL OF A LICENSED PROFESSIONAL ENGINEER OR LAND SURVEYOR IS A VIOLATION OF SECTION 7209 SUBSECTION 2 OF THE NEW YORK STATE EDUCATION LAW.

COPIES OF THIS DOCUMENT WITHOUT A FACSIMILE OF THE SIGNATURE AND AN ORIGINAL EMBOSSED SEAL OR ORIGINAL STAMP IN BLUE OR RED INK OF THE PROFESSIONAL ENGINEER OR LAND SURVEYOR SHALL NOT BE CONSIDERED VALID COPIES.

THIS DOCUMENT IS PREPARED SPECIFICALLY FOR THE CLIENT AND PROJECT DESIGNATED HEREON. MODIFICATION, ALTERATION, REVISION, DUPLICATION, OR USE WITHOUT THE CONSENT OF TECTONIC ENGINEERING, PC IS PROHIBITED. COPYRIGHT 2001 TECTONIC ENGINEERING, PC. ALL RIGHTS RESERVED.

0 1 2 3
ORIGINAL SIZE IN INCHES

Rev	Date	Revision	Approved
1	6/18/01	REVISED LOT AREA IN BULK TABLE	

DRAWING CONTROL

Designed by:	Drawn by:	Checked by:

Purpose	Released by	Date
( ) For Comment		
( ) For Approval		
( ) For Bid		
(X) For Construction		

CONCEPTUAL LAYOUT

HARP ESTATE
NYS ROUTE 300
TOWN OF NEW WINDSOR
ORANGE COUNTY, NEW YORK

Date	Work Order	Drawing No.	Rev
5/4/01	3067.01	SK-103	0
Scale 1" = 100'			